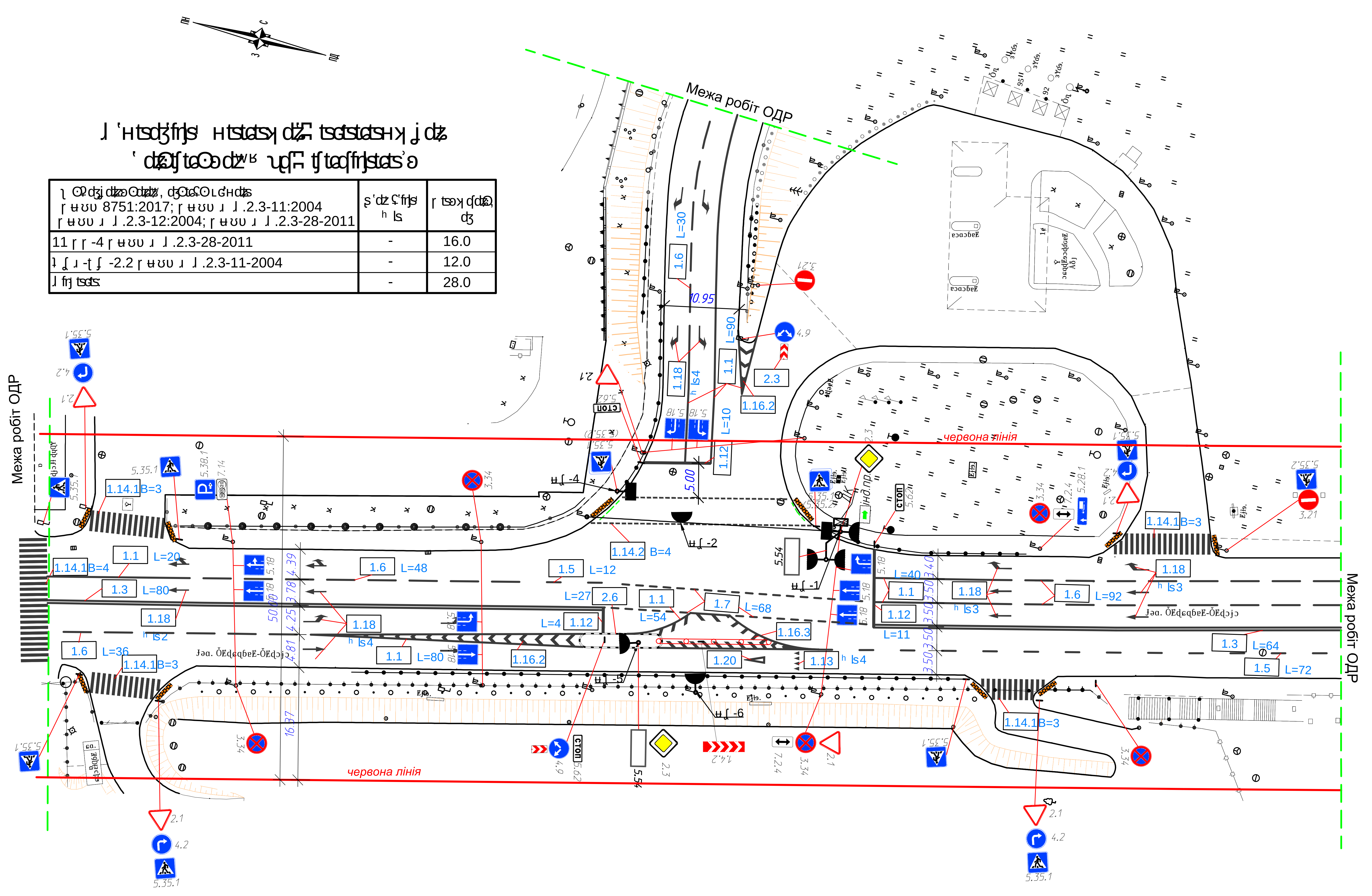

[illegible]		
[illegible] 8751:2017; [illegible] 2.3-11:2004; [illegible] 2.3-12:2004; [illegible] 2.3-28-2011	[illegible]	[illegible]
11 [illegible] -4 [illegible] 2.3-28-2011	-	16.0
[illegible] -2.2 [illegible] 2.3-11-2004	-	12.0
[illegible]	-	28.0

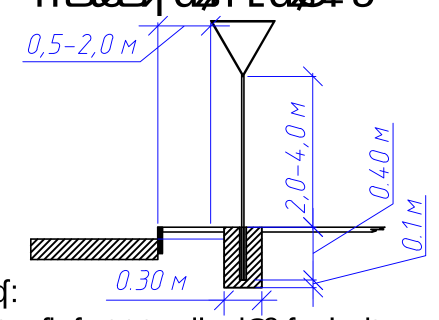

1. [illegible] 4100-2014;
2. [illegible] 2587-2010.

[illegible] ДСТУ 4100	[illegible] I	[illegible] II	[illegible]	[illegible]	[illegible]
1.4.2		1		-	[illegible] 3.45
2.1		6		-	-
2.3		2		-	-
3.21		2		-	-
3.34		5		-	-
4.2		4		-	-
4.9		2		-	-
5.18		9		-	-
5.35.1		9		-	-
5.35.2		3		-	-
5.38.1		1		-	-
5.54		-	2	-	-
5.62		3		-	-
7.2.4		2		-	-
7.5.3		2		-	-
7.14		1		-	-
[illegible]		52	2	-	-

[illegible] ДСТУ 2587	[illegible]	[illegible]	[illegible]	[illegible]	[illegible]
1.1	-	284	28.4	-	-
1.3	-	144	28.8	-	-
1.5	-	84	2.8	-	-
1.6	-	206	13.7	-	-
1.7	-	68	3.4	-	-
1.12	-	26	10.4	-	-
1.13	4	-	0.7	-	-
1.14.1B=3[illegible]	4	-	64.2	-	-
1.14.2 B=4[illegible]	1	-	7.6	-	-
1.16.1	1	-	8.5	-	-
1.16.2	2	-	12.5	-	-
1.16.3	1	-	2.7	-	-
1.18	18	-	17.3	-	-
1.20	1	-	1.0	-	-
2.3	2	-	1.0	1.0	-
2.6	1	-	3.9	-	3.9
[illegible]	35	812	206.9	1.0	3.9

Ситуаційна схема

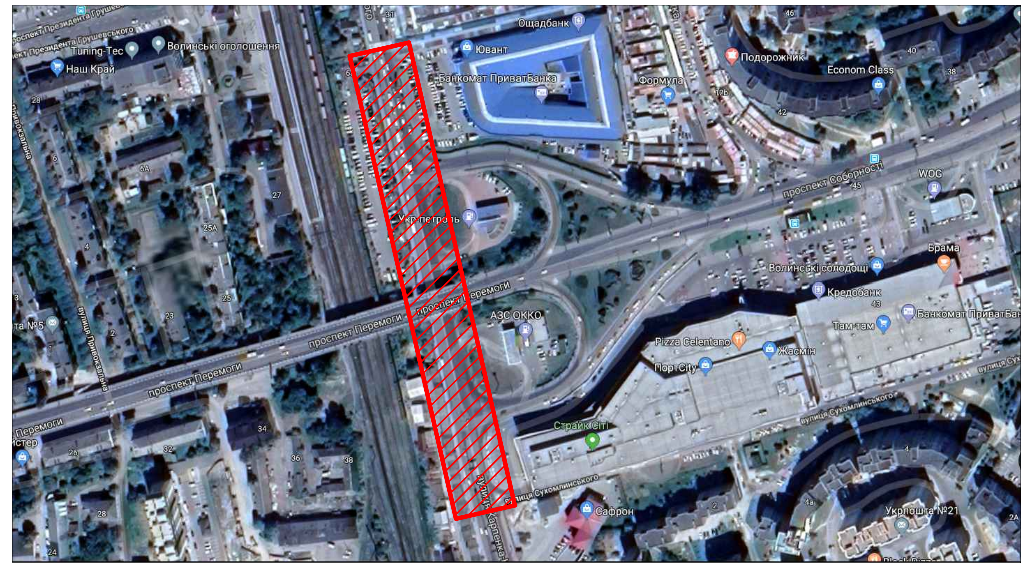

Погоджено

Зам. інв. №

Підпис і дата

Інв. № ор.

Ціоп'ях

Назарчук

Ціоп'ях

"ТОЛА ДОРПРОЕКТ"